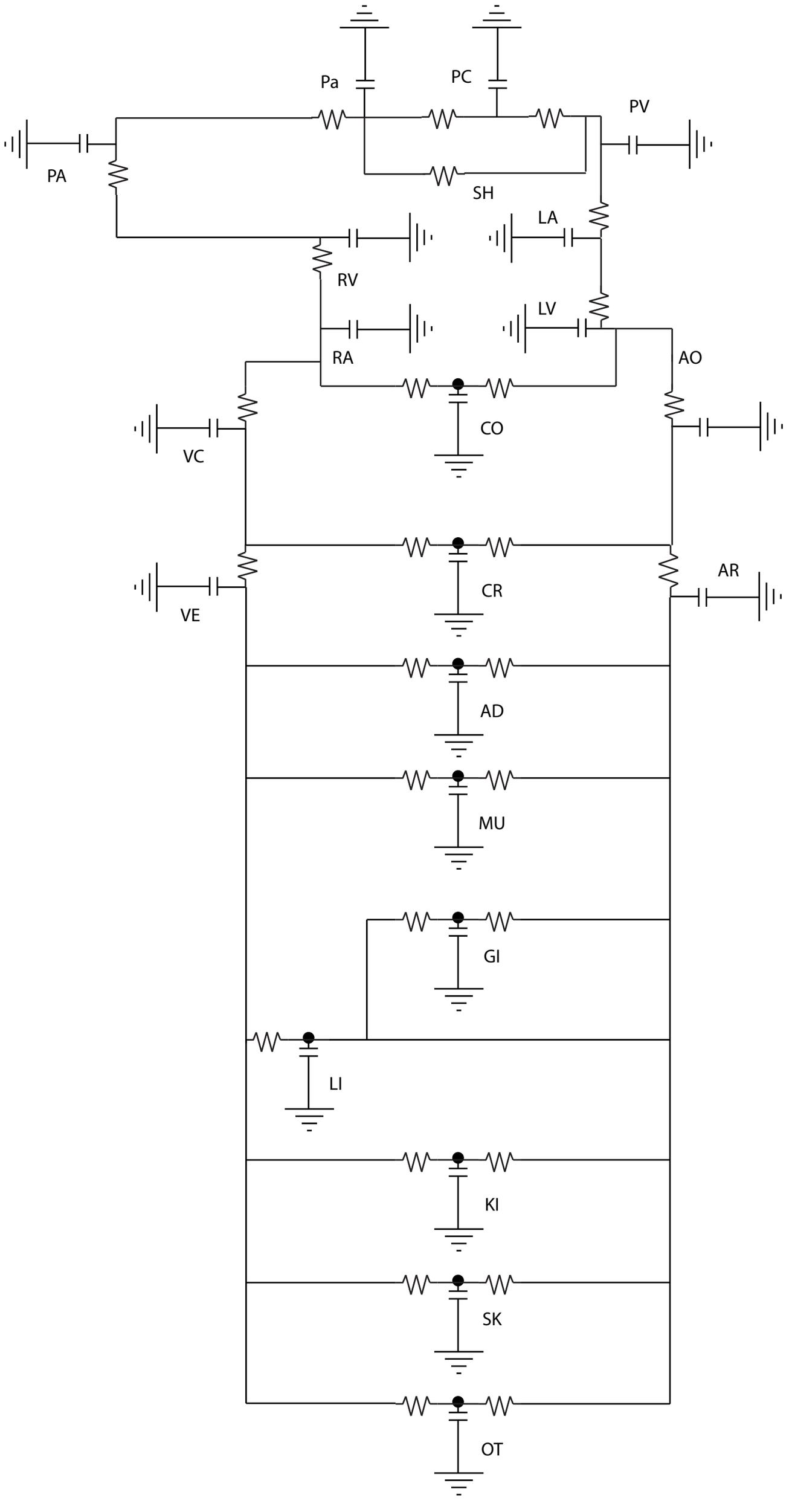
Pa
PC
PV
PA
SH
LA
RV
LV
RA
AO
CO
VC
CR
AR
VE
AD
MU
GI
LI
KI
SK
OT